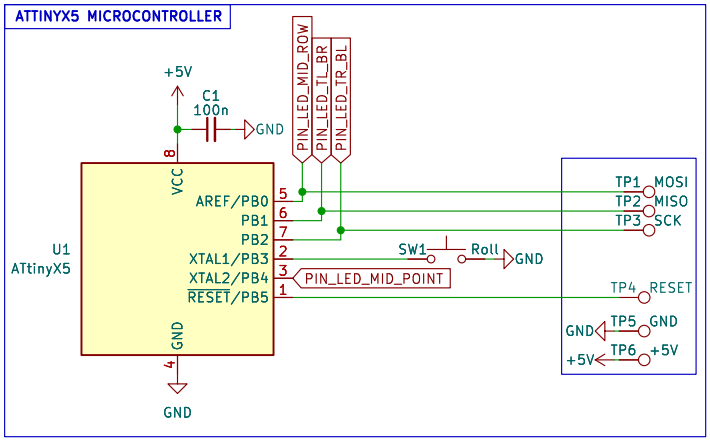

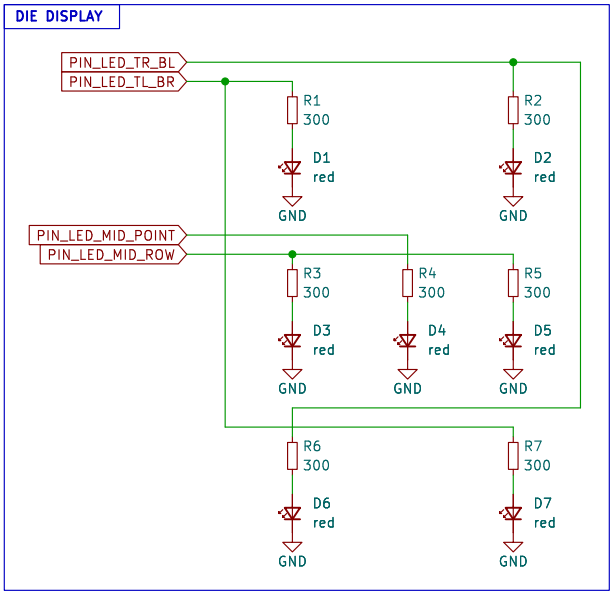

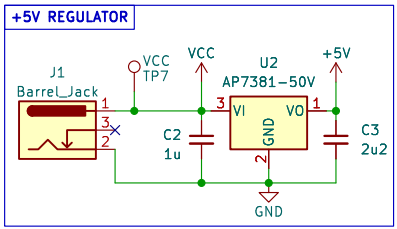

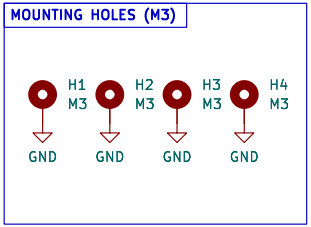

Falko Schmidt

Sheet: /

File: Soldering_Kit_Die.kicad_sch

Title: tinyDie

Size: A5	Date: 2023-10-31	**Rev: v1.0**
KiCad E.D.A. 8.0.2		Id: 1/1